Mazda Miata/MX5 Power Retractable Hard Top (PRHT) Lubrication Guide

This is an unofficial guide developed based on 30 years educational/professional experience in mechanical engineering and 10 years of PRHT ownership to include extensive research on operation, maintenance and repair of dozens of PRHTs.

Diagrams are from numerous MAZDA documents annotated with addition graphics for clarity.

Lubricants

Grease and oil lubricants are needed to keep the PRHT operating smoothly and quietly for years and years. Lubricants are used to reduce the friction, heat, and wear between mechanical components that are in contact with each other.

Grease, in simplistic terms, is an oil with an organic or inorganic thickening agent to allow adherence to mating components when an oil bath is impractical due to environmental or system design limitations.

The mating gear and pinion assemblies as well as the rear deck panel plastic cam guides of the PRHT require grease to reduce friction and wear. There is no need for a grease to reduce heat with any component of the PRHT due to the low load and low speed of operation. There is ABSOLUTELY no need for fancy expensive grease such as Krytox when there are so many less expensive products that are readily available.

Check your workshop and likely you already have a suitable grease on hand. Auto and trailer wheel bearing grease is one of my favorites and readily available at your local auto parts or Walmart.

I recommend avoiding the very light white lithium based greases and especially the lithium spray lube. It seems like an easy way to grease components, but it is difficult to limit the area of application and excess grease and oil leads to unnecessary attraction of dirt and debris.

Oil is needed to lubricate the dozens of linkage arm pivot joints to reduce friction and wear. Engine oil is my recommended favorite due to its viscosity which is low enough to flow into the joint and thick enough to provide lasting friction and wear protection. Application of engine oil does require an applicator such as a refillable pen oiler or syringe. Google “Pen oiler” or “Precision oiler” and pick from prefilled or refillable. I prefer the inexpensive plastic bottles with the long needle that I fill with engine oil.

There are various oil lubricants available in spray for easy application but be careful with selection as some common products like WD 40 are not actual lubricants and once again the white lithium spray will not flow into the pivot joint.

Application. When applying grease to the gears and cam guides limit the application to the mating surfaces and not the sides of the gears or guides. A small artist brush or a syringe works well. Excess grease attracts dirt and debris and just makes a general mess.

When applying oil to the pivot joints put a drop between the linkage arms and on either side of the pivot pin. Have a rag handy to catch any drips and after application wipe up any excess oil.

Mazda Miata/MX5 Power Retractable Hard Top (PRHT) Lubrication Guide

Frequency. I recommend at least annually to grease and oil the PRHT components. Increase frequency if the PRHT is cycled daily and less frequently for those that on drive a few 1000 miles a year.

PRHT basics – the major components and terminology are summarized in the figure below.

id091600101100

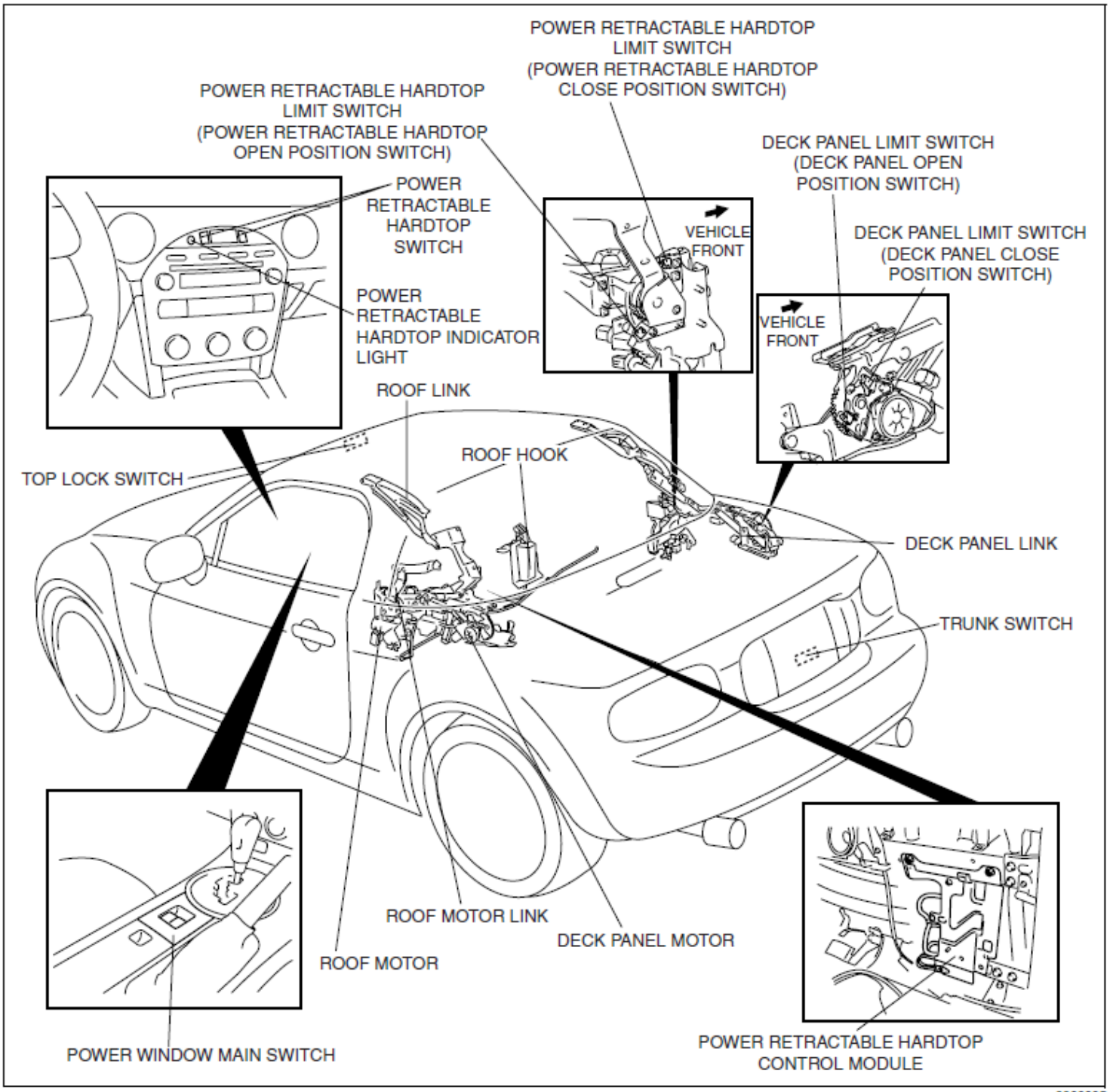

amxuun0000005

Mazda Miata/MX5 Power Retractable Hard Top (PRHT) Lubrication Guide

Red circles indicate locations for application of oil.

Blue lines indicate locations for application of grease.

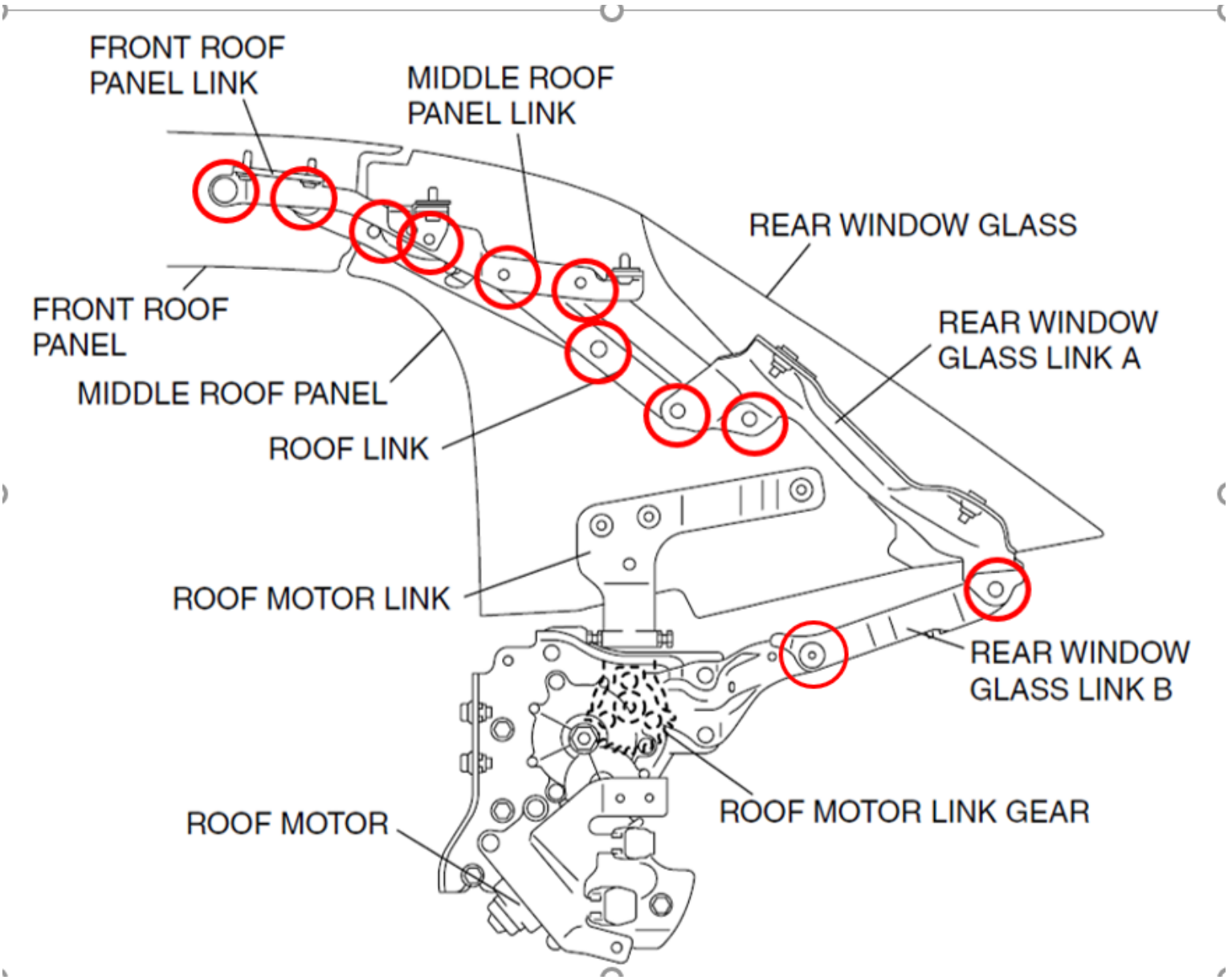

Mazda Miata/MX5 Power Retractable Hard Top (PRHT) Lubrication Guide

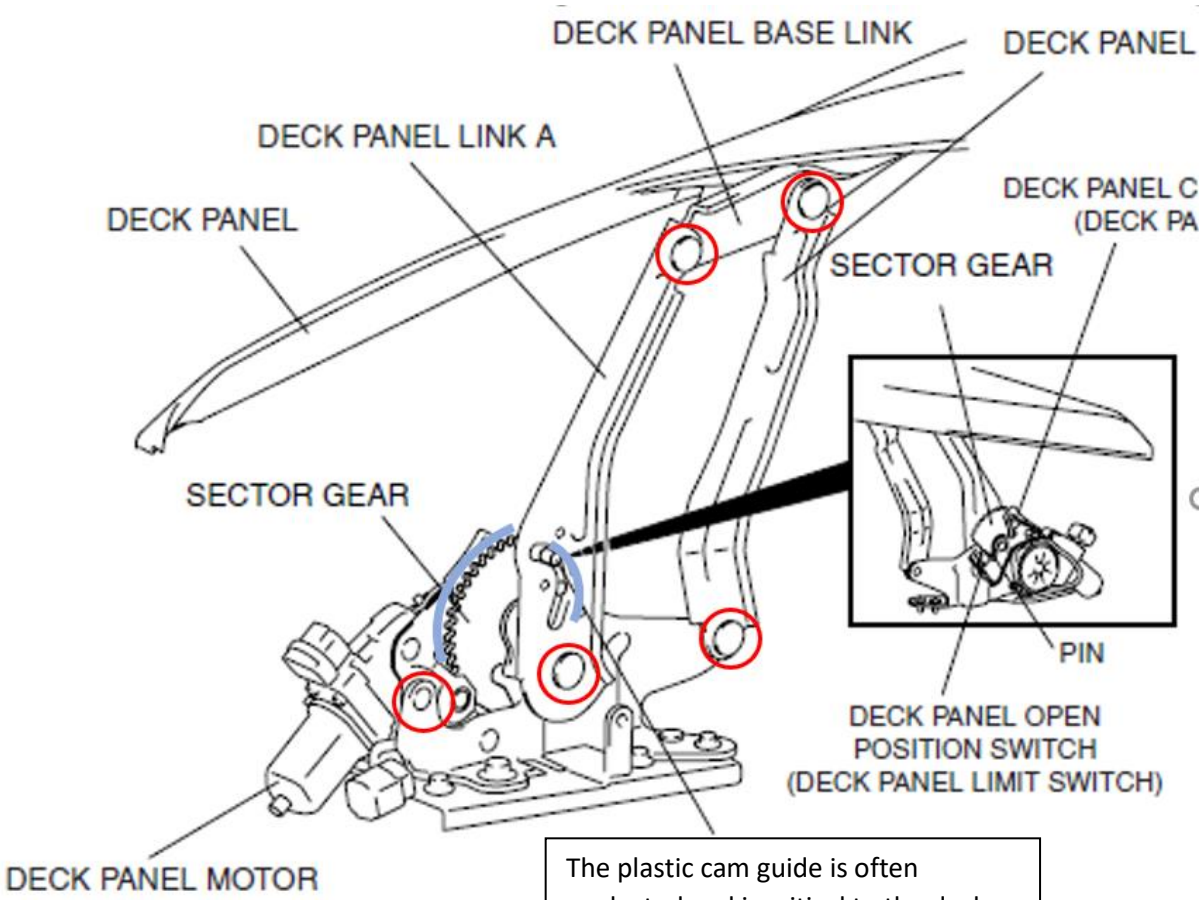

The plastic cam guide is often neglected and is critical to the deck panel smooth movement. The plastic guides are replaceable if worn or broken.

Left and right side part #

NG20R16CX, NG20R16CY

Mazda Miata/MX5 Power Retractable Hard Top (PRHT) Lubrication Guide

The roof motor gear can only be access with the roof in the full open position. Apply grease to the exposed gear teat. Cycling the roof open and closed will distribute the grease to the motor pinion gear and the remaining gear teeth. There is an additional diagram below this one with an enlarged image of the gear.

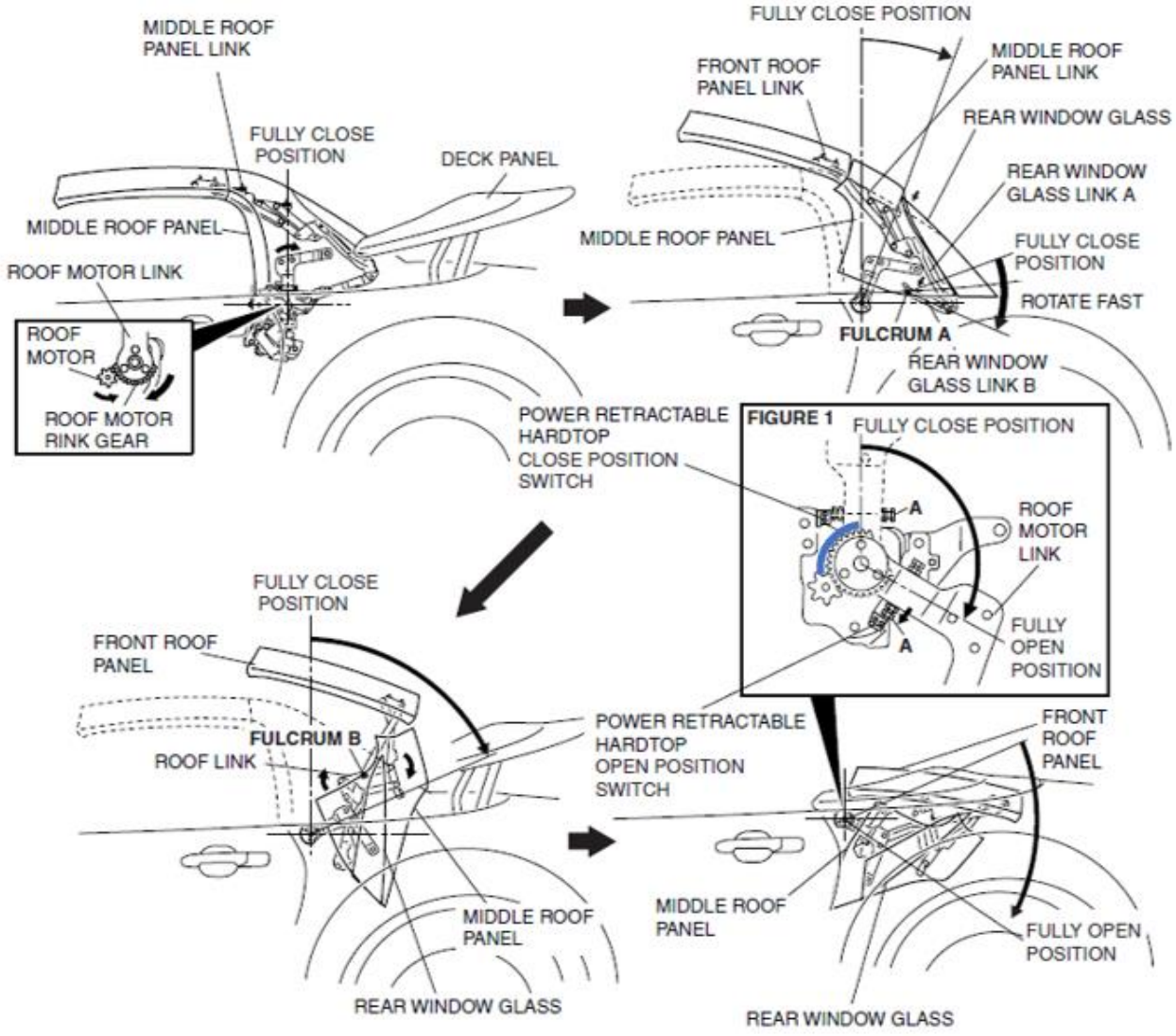

Mazda Miata/MX5 Power Retractable Hard Top (PRHT) Lubrication Guide

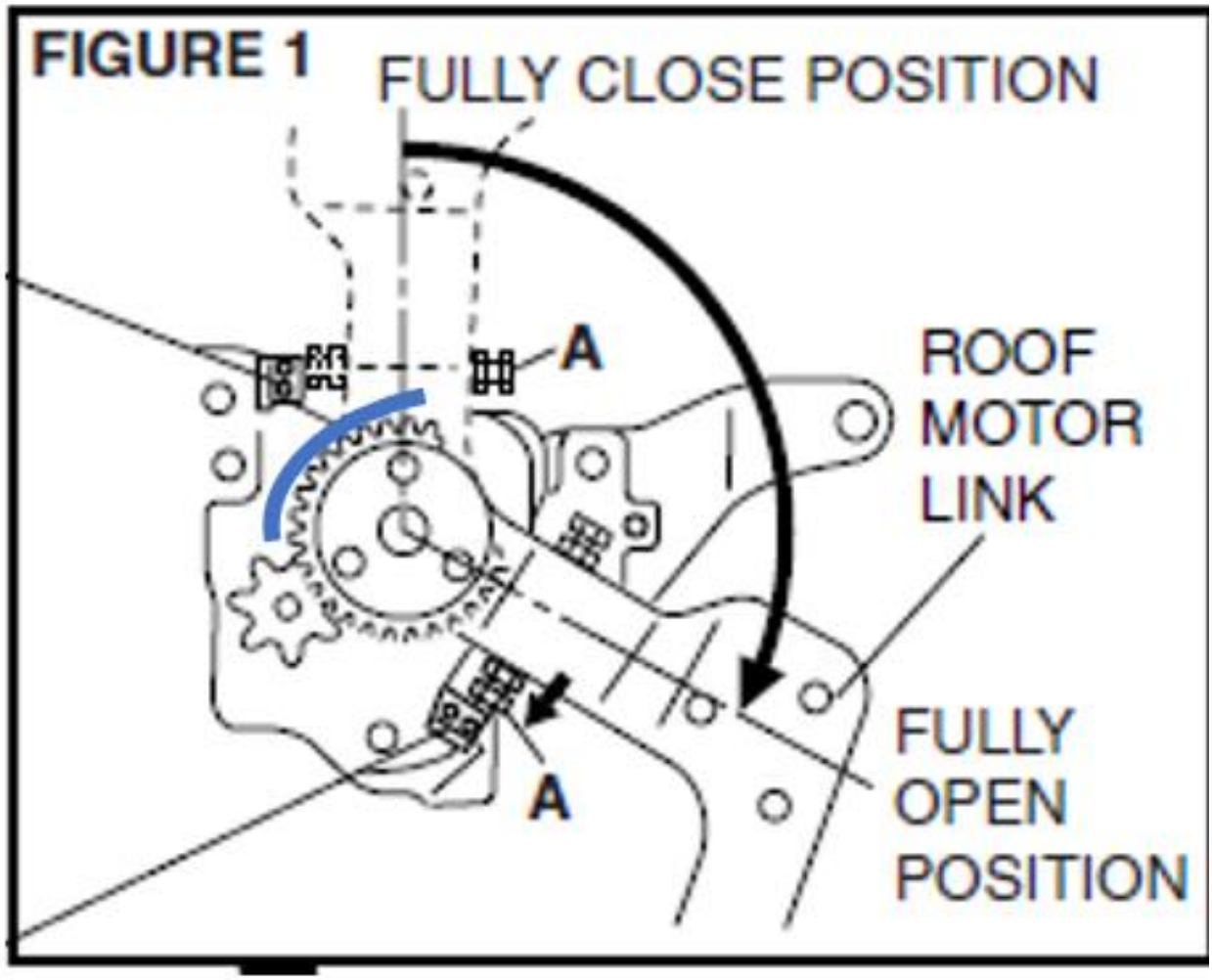

Mazda Miata/MX5 Power Retractable Hard Top (PRHT) Lubrication Guide
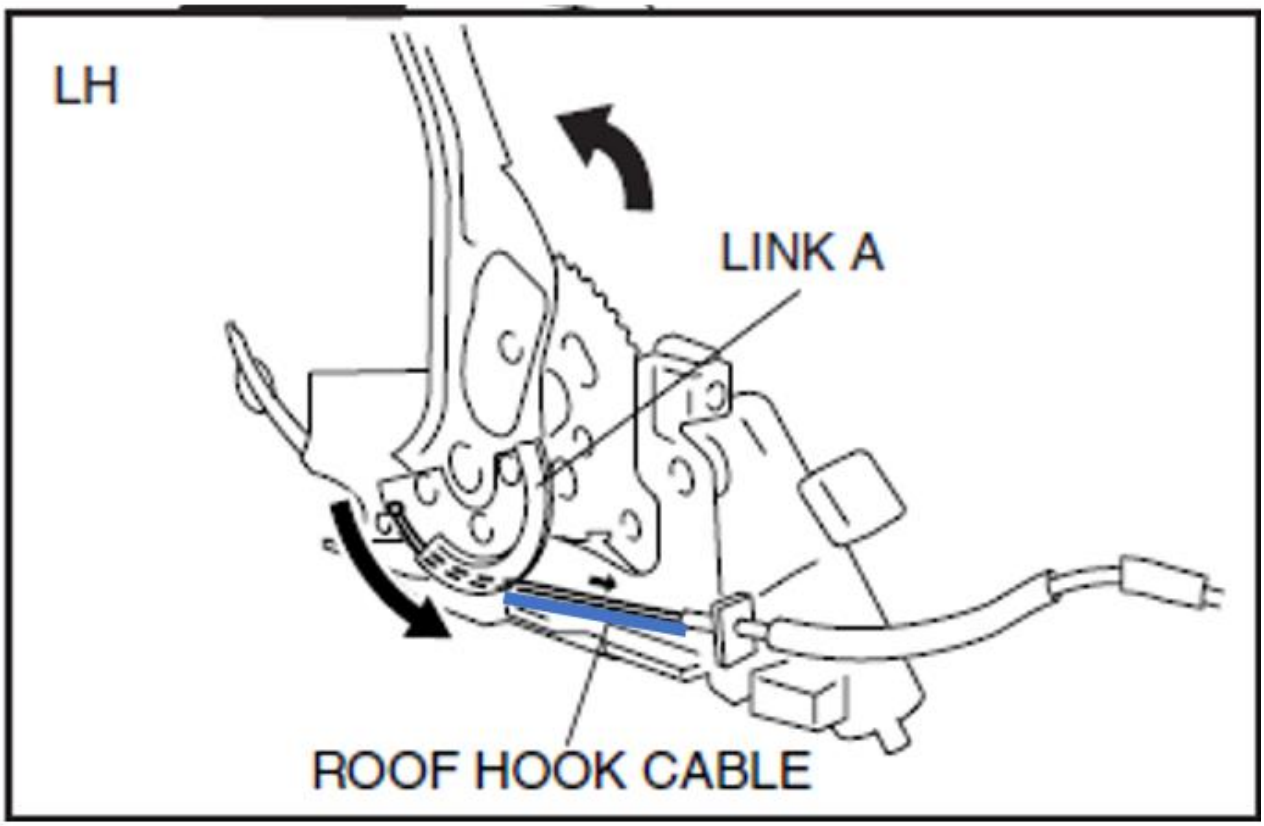
Lastly don’t forget to apply grease to exposed short section of the roof hook cable.